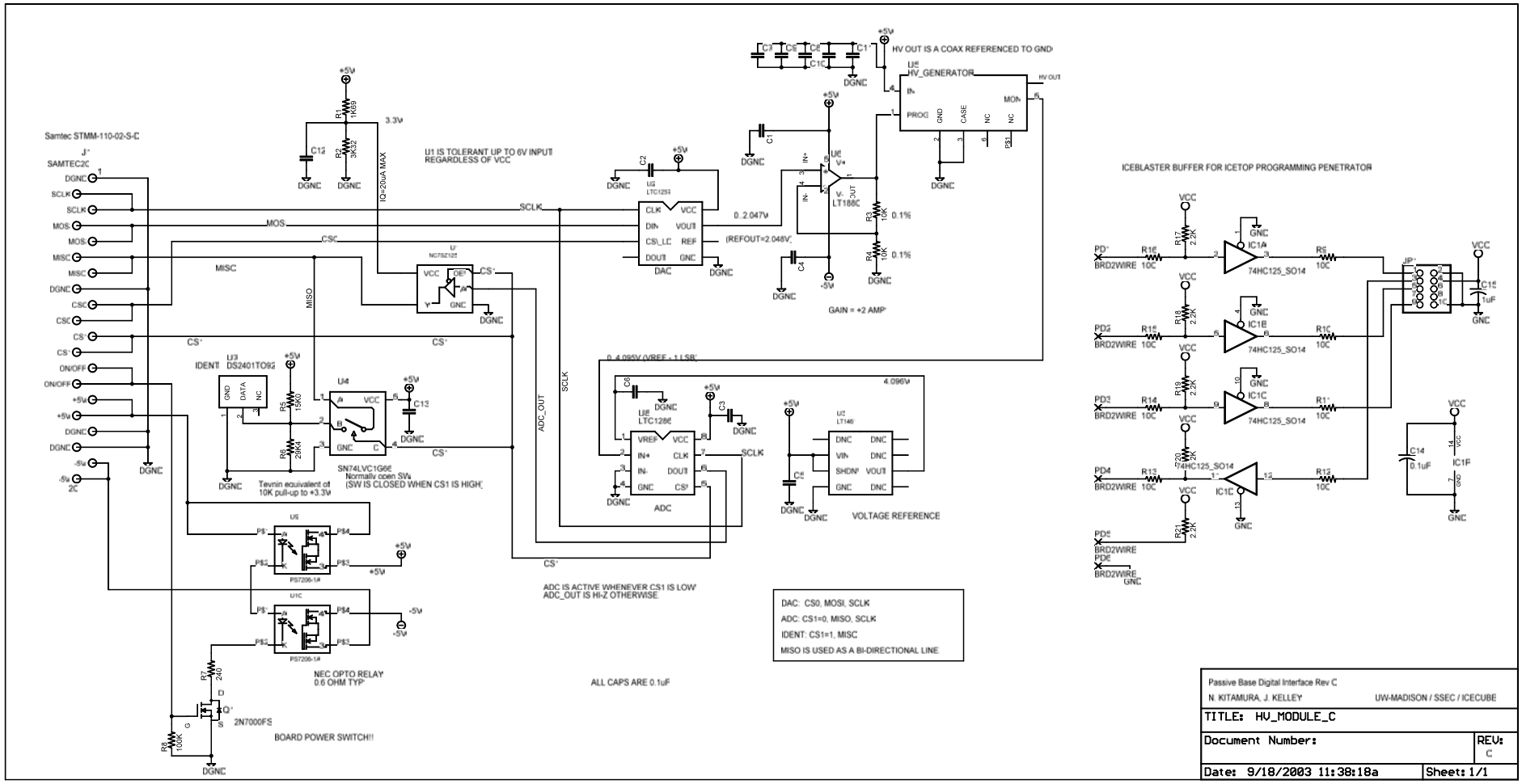
Samtec STMM-110-02-S-D
J1
SAMTEC20
DGND
SCLK
MOSI
MISO
CS0
CS1
ON/OFF
+5V
-5V
2C
U1 IS TOLERANT UP TO 6V INPUT REGARDLESS OF VCC
IQ=20uA MAX
3.3V
R1 1K00
R2 3K32
C12
U2 NC7SZ125
VCC
OE
A
Y
GND
U3 DS2401TO92
IDENT
GND
DATA
NC
R5 15K0
R6 20K4
U4
SN74LVC1G66
Normally open SW
(SW IS CLOSED WHEN CS1 IS HIGH)
Tevnin equivalent of 10K pull-up to +3.3V
U5
PS7206-1A
U1C
NEC OPTO RELAY
0.6 OHM TYP
R7 240
Q1
2N7000FS
R8 100K
BOARD POWER SWITCH!!
U6 LTC1257
CLK
DIN
CS/LD
DOUT
VCC
VOUT
REF
GND
DAC
0..2.047V
(REFOUT=2.048V)
U5 LT1886
IN+
IN-
V+
V-
OUT
R3 10K 0.1%
R4 10K 0.1%
GAIN = +2 AMP
HV OUT IS A COAX REFERENCED TO GND
U8 HV_GENERATOR
IN
PROG
GND
CASE
NC
MON
HV OUT
0..4.095V (VREF + 1 LSB)
U9 LTC1286
VREF
IN+
IN-
DOUT
CS
ADC
4.096V
U2 LT1461
DNC
VIN
SHDN
VOUT
VOLTAGE REFERENCE
ADC IS ACTIVE WHENEVER CS1 IS LOW
ADC_OUT IS HI-Z OTHERWISE
DAC: CS0, MOSI, SCLK
ADC: CS1=0, MISO, SCLK
IDENT: CS1=1, MISC
MISO IS USED AS A BI-DIRECTIONAL LINE
ALL CAPS ARE 0.1uF
ICEBLASTER BUFFER FOR ICETOP PROGRAMMING PENETRATOR
PD1
PD2
PD3
PD4
PD5
BRD2WIRE
R16 10C
R15 10C
R14 10C
R13 10C
R17 2.2K
R18 2.2K
R19 2.2K
R20 2.2K
R21 2.2K
74HC125_SO14
IC1A
IC1B
IC1C
IC1D
IC1F
R5 10C
R10 10C
R11 10C
R12 10C
JP1
C15 1uF
C14 0.1uF
Passive Base Digital Interface Rev C
N. KITAMURA, J. KELLEY
UW-MADISON / SSEC / ICECUBE
TITLE: HV_MODULE_C
Document Number:
REV: C
Date: 9/18/2003 11:38:18a
Sheet: 1/1