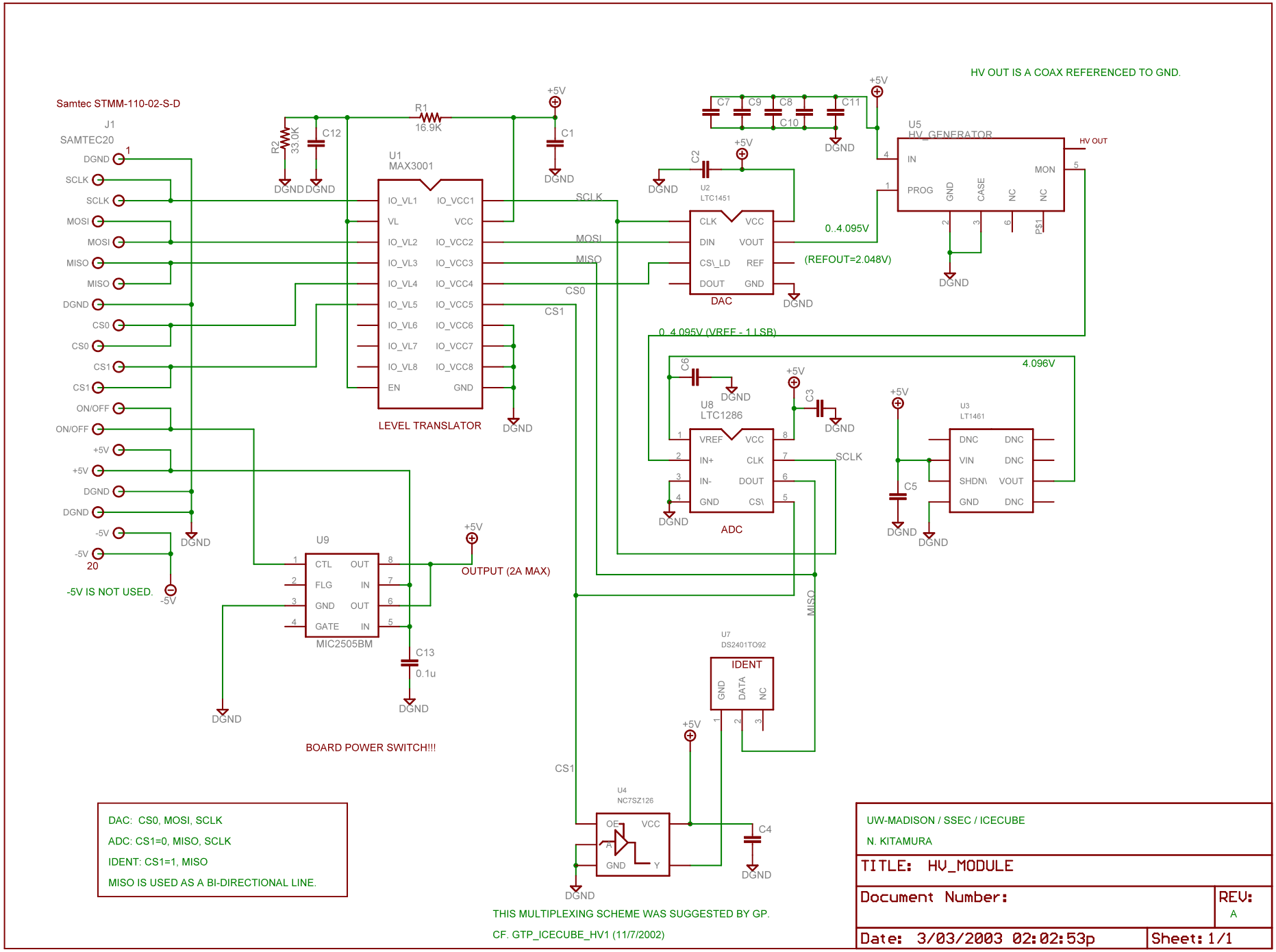

3/03/2003 02:04:06p f=0.79 C:/Program Files/EAGLE-4.09/projects/HV_MODULE/HV_MODULE.sch (Sheet: 1/1)